MOSFET

800V CoolMOS™ P7 Power Transistor

The latest 800V CoolMOS™ P7 series sets a new benchmark in 800V super junction technologies and combines best-in-class performance with state of the art ease-of-use, resulting from Infineon's over 18 years pioneering super junction technology innovation.

DPAK

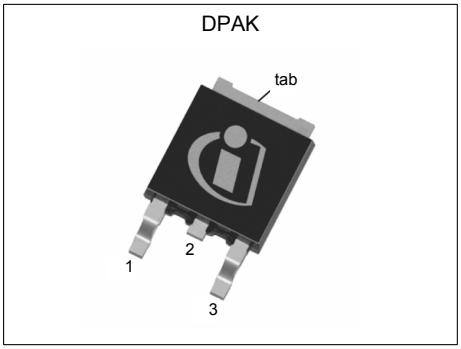

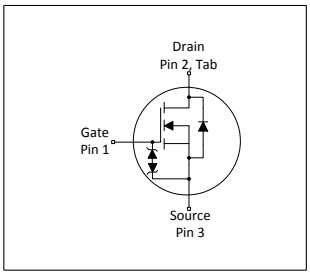

Features

- Best-in-class FOM $R_{DS(on)}$ * E_{oss}; reduced Q_g, C_{iss}, and C_{oss}
- Best-in-class DPAK $R_{DS(on)}$
- Best-in-class $V_{(GS)th}$ of 3V and smallest $V_{(GS)th}$ variation of ±0.5V
- Integrated Zener Diode ESD protection
- Best-in-class CoolMOS™ quality and reliability; qualified for industrial grade applications according to JEDEC (J-STD20 and JESD22)
- Fully optimized portfolio

Benefits

- Best-in-class performance
- Enabling higher power density designs, BOM savings and lower assembly costs
- Easy to drive and to parallel
- Better production yield by reducing ESD related failures
- Less production issues and reduced field returns
- Easy to select right parts for fine tuning of designs

Applications

Recommended for hard and soft switching flyback topologies for LED Lighting, low power Chargers and Adapters, Audio, AUX power and Industrial power. Also suitable for PFC stage in Consumer applications and Solar.

Please note: For MOSFET paralleling the use of ferrite beads on the gate or seperate totem poles is generally recommended.

Table 1 Key Performance Parameters

Parameter	Value	Unit
V_{DS} @ $T_{j=25°C}$	800	V
$R_{DS(on),max}$	0.28	Ω
$Q_{g,typ}$	36	nC
I_D	17	A
E_{oss} @ 500V	4	µJ
$V_{GS(th),typ}$	3	V
ESD class (HBM)	2	-

Type / Ordering Code	Package	Marking	Related Links
IPD80R280P7	PG-TO 252	80R280P7	see Appendix A

Table of Contents

Description 1
Maximum ratings 3
Thermal characteristics 3
Electrical characteristics 4
Electrical characteristics diagrams 6
Test Circuits 10
Package Outlines 11
Appendix A 12
Revision History 13
Trademarks 13
Disclaimer 13

1 Maximum ratings

at T_j = 25°C, unless otherwise specified

Table 2 Maximum ratings

Parameter	Symbol	Values			Unit	Note / Test Condition
		Min.	Typ.	Max.		
Continuous drain current[1]	I_D	- -	- -	17 10.6	A	T_C=25°C T_C=100°C
Pulsed drain current[2]	$I_{D,pulse}$	-	-	45	A	T_C=25°C
Avalanche energy, single pulse	E_{AS}	-	-	43	mJ	I_D=2.2A; V_{DD}=50V
Avalanche energy, repetitive	E_{AR}	-	-	0.36	mJ	I_D=2.2A; V_{DD}=50V
Avalanche current, repetitive	I_{AR}	-	-	2.2	A	-
MOSFET dv/dt ruggedness	dv/dt	-	-	100	V/ns	V_{DS}=0 to 400V
Gate source voltage	V_{GS}	-20 -30	- -	20 30	V	static; AC (f>1 Hz)
Power dissipation	P_{tot}	-	-	101	W	T_C=25°C
Operating and storage temperature	T_j, T_{stg}	-55	-	150	°C	-
Continuous diode forward current	I_S	-	-	12	A	T_C=25°C
Diode pulse current[2]	$I_{S,pulse}$	-	-	45	A	T_C=25°C
Reverse diode dv/dt[3]	dv/dt	-	-	1	V/ns	V_{DS}=0 to 400V, I_{SD}<=3.6A, T_j=25°C
Maximum diode commutation speed[3]	di_f/dt	-	-	50	A/µs	V_{DS}=0 to 400V, I_{SD}<=3.6A, T_j=25°C

2 Thermal characteristics

Table 3 Thermal characteristics

Parameter	Symbol	Values			Unit	Note / Test Condition
		Min.	Typ.	Max.		
Thermal resistance, junction - case	R_{thJC}	-	-	1.2	°C/W	-
Thermal resistance, junction - ambient	R_{thJA}	-	-	62	°C/W	Device on PCB, minimal footprint
Thermal resistance, junction - ambient for SMD version	R_{thJA}	-	35	45	°C/W	Device on 40mm*40mm*1.5mm epoxy PCB FR4 with 6cm² (one layer 70µm thickness) copper area for drain connection and cooling. PCB is vertical without air stream cooling.
Soldering temperature, wave- & reflow soldering allowed	T_{sold}	-	-	260	°C	reflow MSL1

[1] Limited by $T_{j\,max}$. Maximum duty cycle D=0.5
[2] Pulse width t_p limited by $T_{j,max}$
[3] V_{DClink}=400V; $V_{DS,peak}$<$V_{(BR)DSS}$; identical low side and high side switch with identical R_G; t_{cond}<2µs

3 Electrical characteristics

at T_j = 25°C, unless otherwise specified

Table 4 Static characteristics

Parameter	Symbol	Values			Unit	Note / Test Condition
		Min.	Typ.	Max.		
Drain-source breakdown voltage	$V_{(BR)DSS}$	800	-	-	V	V_{GS}=0V, I_D=1mA
Gate threshold voltage	$V_{GS(th)}$	2.5	3	3.5	V	V_{DS}=V_{GS}, I_D=0.36mA
Zero gate voltage drain current	I_{DSS}	- -	- 10	1 -	µA	V_{DS}=800V, V_{GS}=0V, T_j=25°C V_{DS}=800V, V_{GS}=0V, T_j=150°C
Gate-source leakage curent incl. zener diode	I_{GSS}	-	-	1	µA	V_{GS}=20V, V_{DS}=0V
Drain-source on-state resistance	$R_{DS(on)}$	- -	0.24 0.62	0.28 -	Ω	V_{GS}=10V, I_D=7.2A, T_j=25°C V_{GS}=10V, I_D=7.2A, T_j=150°C
Gate resistance	R_G	-	1	-	Ω	f=250kHz, open drain

Table 5 Dynamic characteristics

Parameter	Symbol	Values			Unit	Note / Test Condition
		Min.	Typ.	Max.		
Input capacitance	C_{iss}	-	1200	-	pF	V_{GS}=0V, V_{DS}=500V, f=250kHz
Output capacitance	C_{oss}	-	20	-	pF	V_{GS}=0V, V_{DS}=500V, f=250kHz
Effective output capacitance, energy related[1]	$C_{o(er)}$	-	38	-	pF	V_{GS}=0V, V_{DS}=0 to 500V
Effective output capacitance, time related[2]	$C_{o(tr)}$	-	490	-	pF	I_D=constant, V_{GS}=0V, V_{DS}=0 to 500V
Turn-on delay time	$t_{d(on)}$	-	10	-	ns	V_{DD}=400V, V_{GS}=13V, I_D=7.2A, R_G=4.7Ω
Rise time	t_r	-	6	-	ns	V_{DD}=400V, V_{GS}=13V, I_D=7.2A, R_G=4.7Ω
Turn-off delay time	$t_{d(off)}$	-	40	-	ns	V_{DD}=400V, V_{GS}=13V, I_D=7.2A, R_G=4.7Ω
Fall time	t_f	-	5	-	ns	V_{DD}=400V, V_{GS}=13V, I_D=7.2A, R_G=4.7Ω

Table 6 Gate charge characteristics

Parameter	Symbol	Values			Unit	Note / Test Condition
		Min.	Typ.	Max.		
Gate to source charge	Q_{gs}	-	5	-	nC	V_{DD}=640V, I_D=7.2A, V_{GS}=0 to 10V
Gate to drain charge	Q_{gd}	-	15	-	nC	V_{DD}=640V, I_D=7.2A, V_{GS}=0 to 10V
Gate charge total	Q_g	-	36	-	nC	V_{DD}=640V, I_D=7.2A, V_{GS}=0 to 10V
Gate plateau voltage	$V_{plateau}$	-	4.5	-	V	V_{DD}=640V, I_D=7.2A, V_{GS}=0 to 10V

[1] $C_{o(er)}$ is a fixed capacitance that gives the same stored energy as C_{oss} while V_{DS} is rising from 0 to 500V
[2] $C_{o(tr)}$ is a fixed capacitance that gives the same charging time as C_{oss} while V_{DS} is rising from 0 to 500V

Table 7 Reverse diode characteristics

Parameter	Symbol	Values			Unit	Note / Test Condition
		Min.	Typ.	Max.		
Diode forward voltage	V_{SD}	-	0.9	-	V	V_{GS}=0V, I_F=7.2A, T_f=25°C
Reverse recovery time	t_{rr}	-	1200	-	ns	V_R=400V, I_F=3.6A, di_F/dt=50A/µs
Reverse recovery charge	Q_{rr}	-	15	-	µC	V_R=400V, I_F=3.6A, di_F/dt=50A/µs
Peak reverse recovery current	I_{rrm}	-	24	-	A	V_R=400V, I_F=3.6A, di_F/dt=50A/µs

4 Electrical characteristics diagrams

Diagram 1: Power dissipation

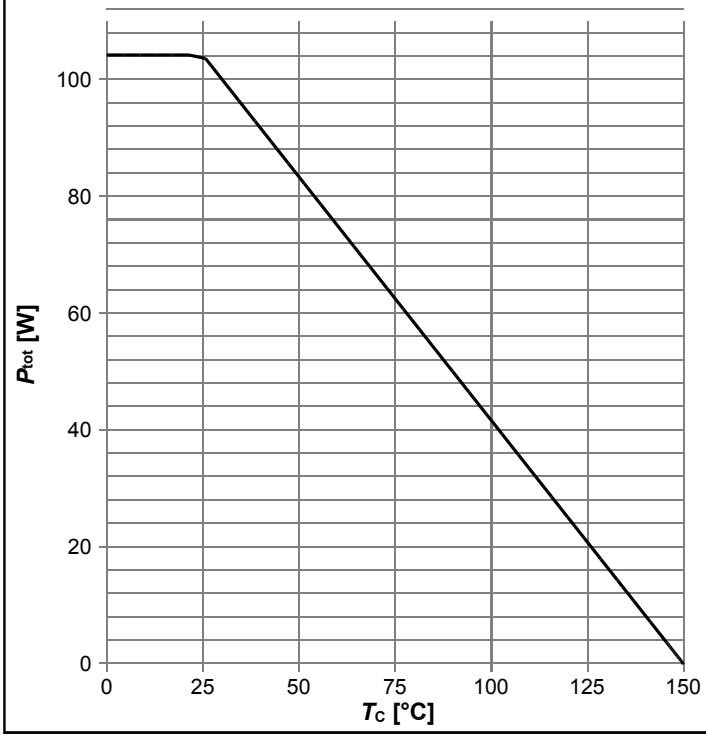

$P_{tot}=f(T_C)$

Diagram 2: Safe operating area

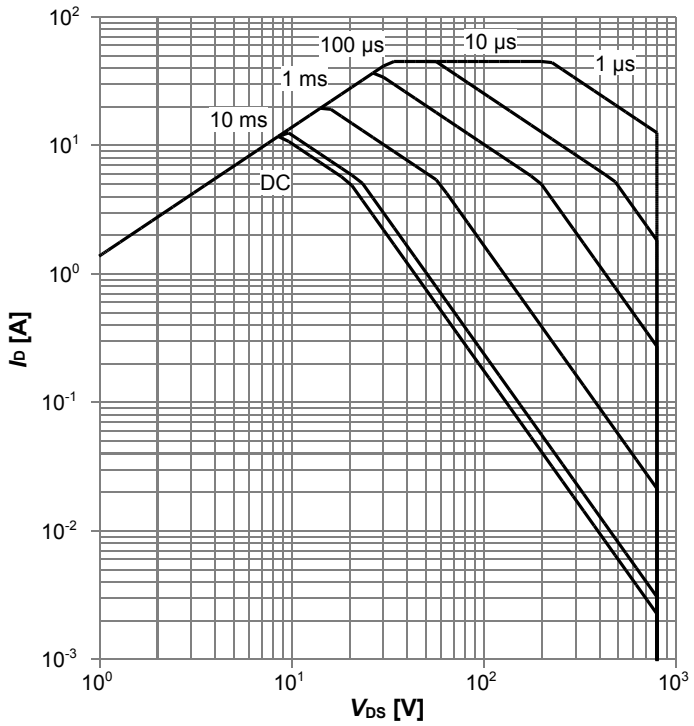

$I_D=f(V_{DS})$; $T_C=25$ °C; $D=0$; parameter: t_p

Diagram 3: Safe operating area

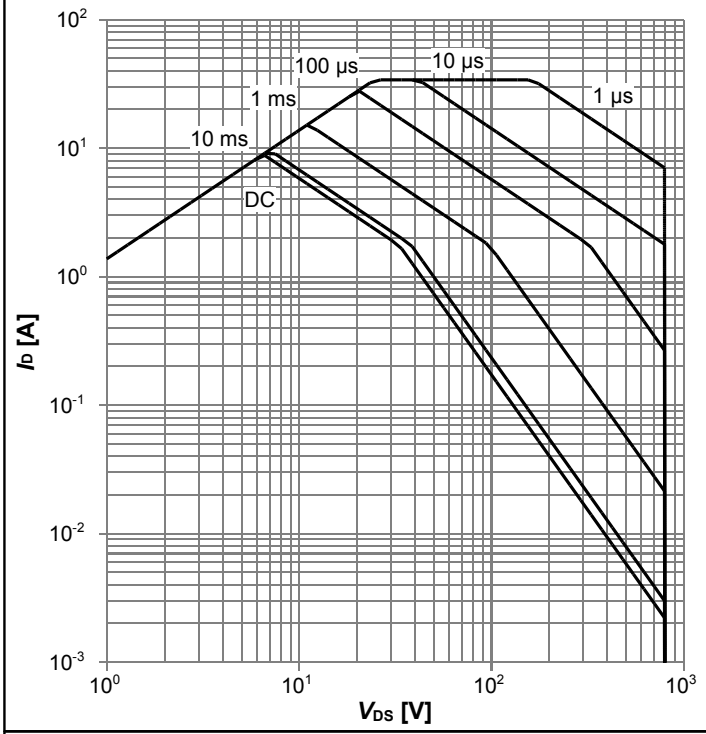

$I_D=f(V_{DS})$; $T_C=80$ °C; $D=0$; parameter: t_p

Diagram 4: Max. transient thermal impedance

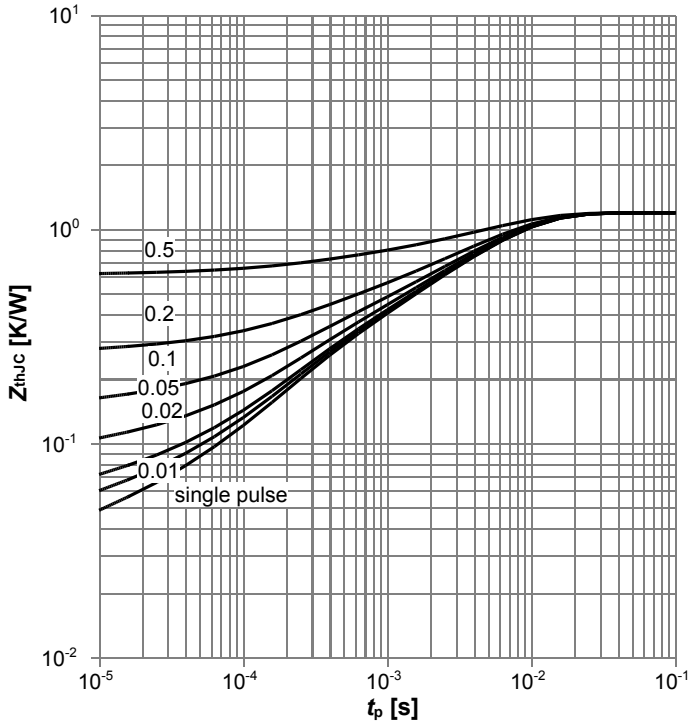

$Z_{thJC}=f(t_P)$; parameter: $D=t_p/T$

Diagram 5: Typ. output characteristics

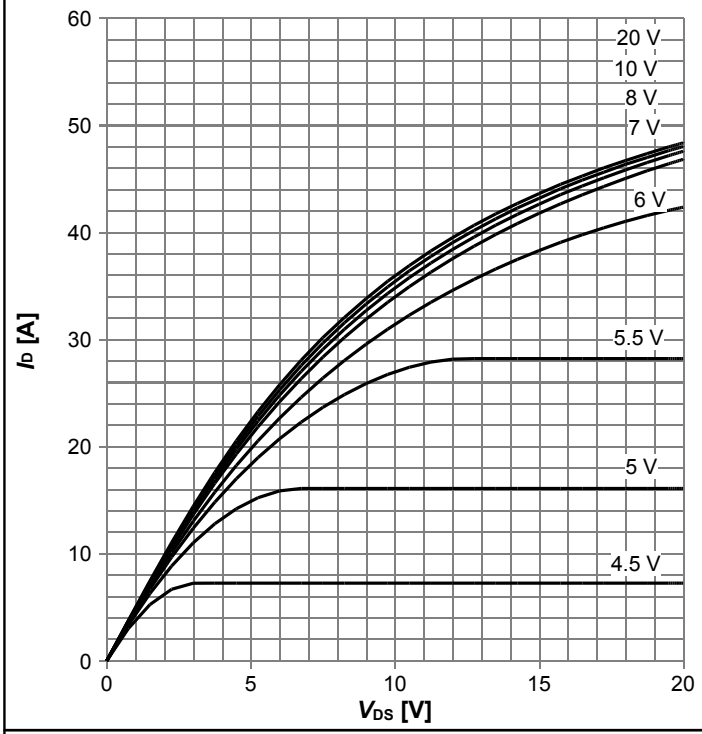

$I_D=f(V_{DS})$; $T_j=25$ °C; parameter: V_{GS}

Diagram 6: Typ. output characteristics

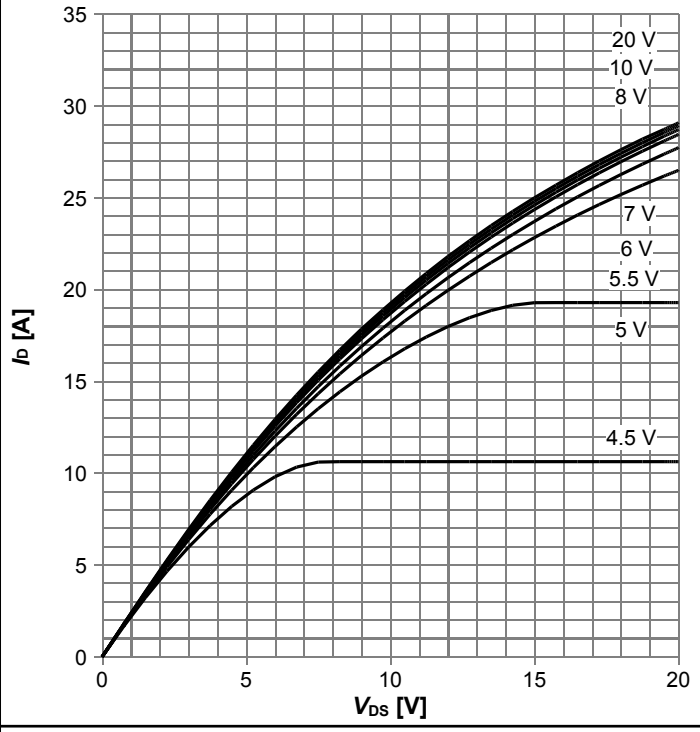

$I_D=f(V_{DS})$; $T_j=125$ °C; parameter: V_{GS}

Diagram 7: Typ. drain-source on-state resistance

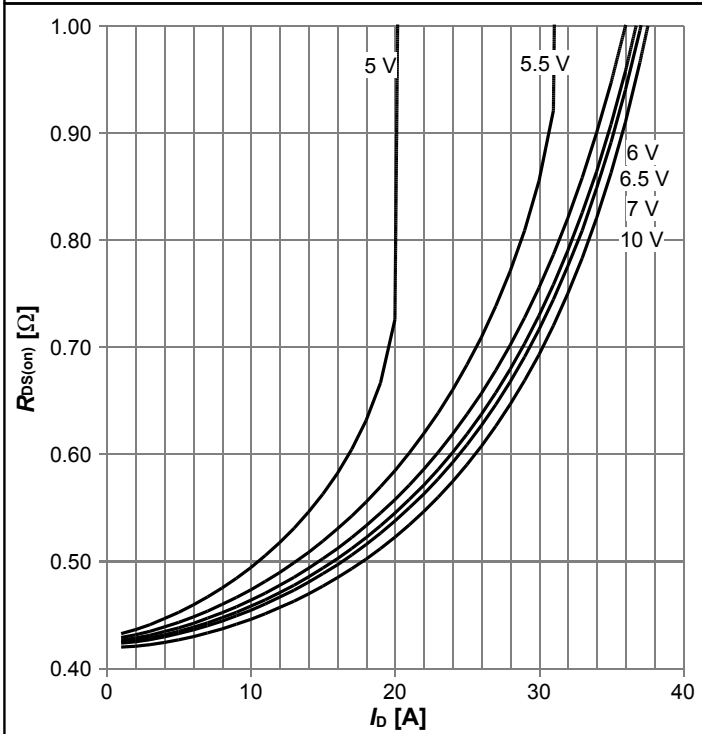

$R_{DS(on)}=f(I_D)$; $T_j=125$ °C; parameter: V_{GS}

Diagram 8: Drain-source on-state resistance

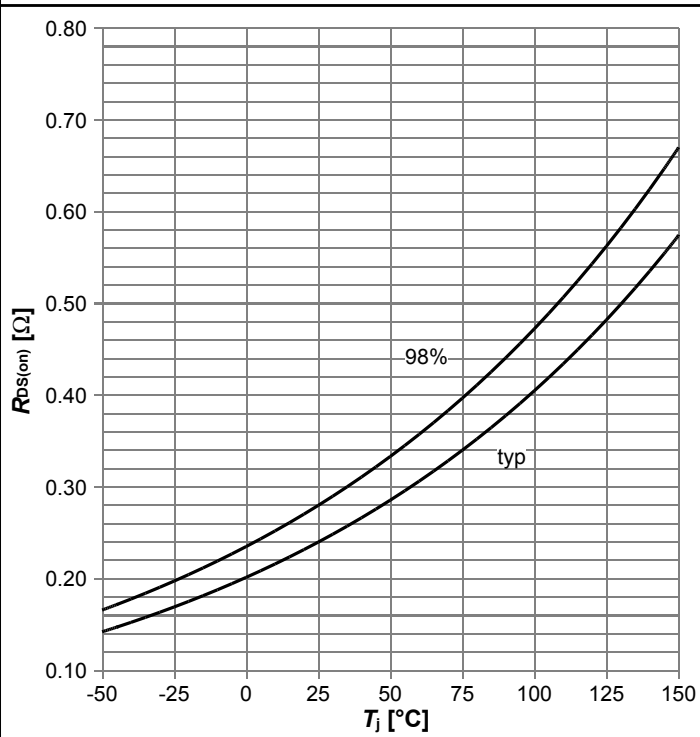

$R_{DS(on)}=f(T_j)$; $I_D=7.2$ A; $V_{GS}=10$ V

Diagram 9: Typ. transfer characteristics

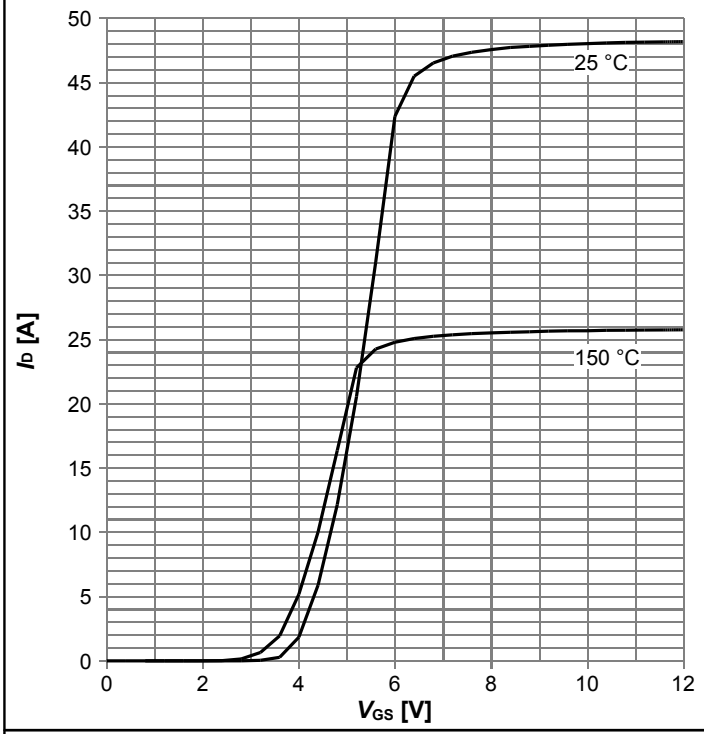

$I_D=f(V_{GS})$; V_{DS}=20V; parameter: T_j

Diagram 10: Typ. gate charge

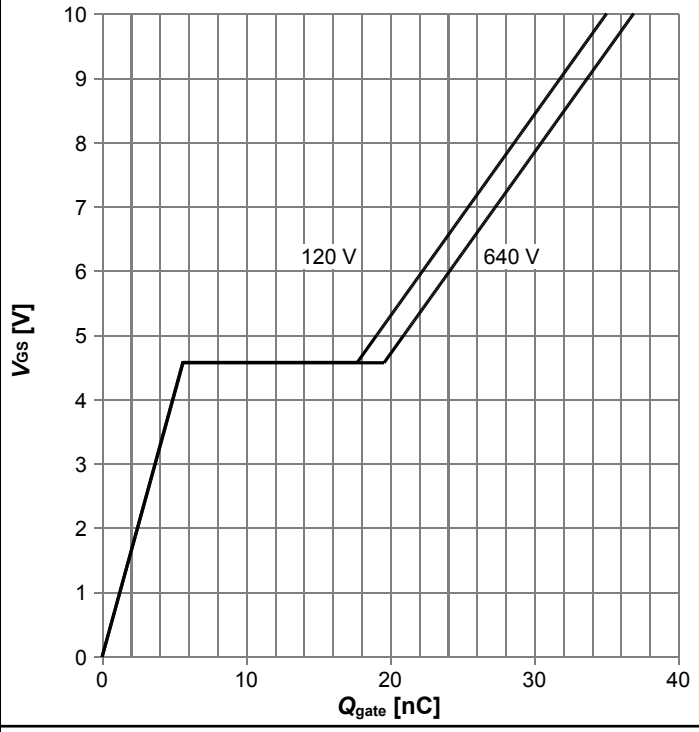

$V_{GS}=f(Q_{gate})$; I_D=7.2 A pulsed; parameter: V_{DD}

Diagram 11: Forward characteristics of reverse diode

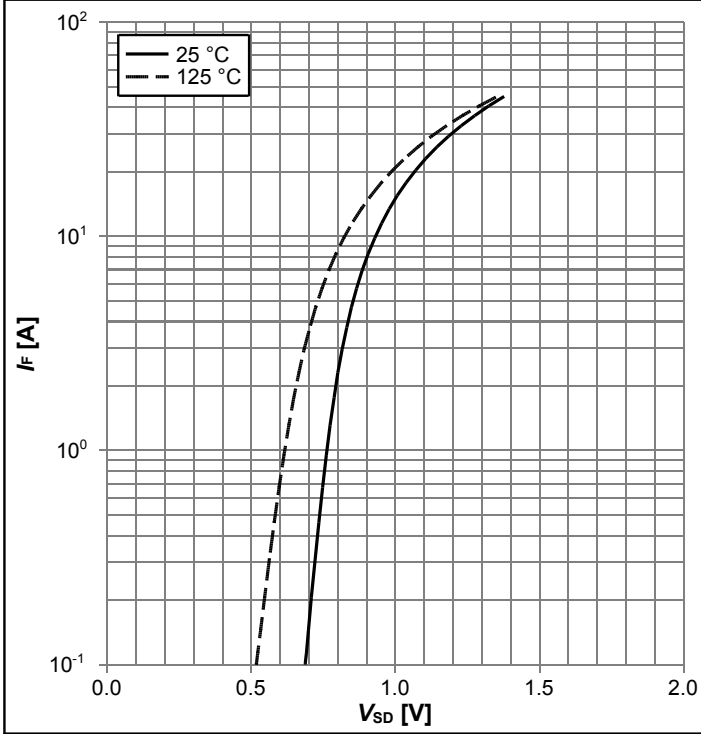

$I_F=f(V_{SD})$; parameter: T_j

Diagram 12: Avalanche energy

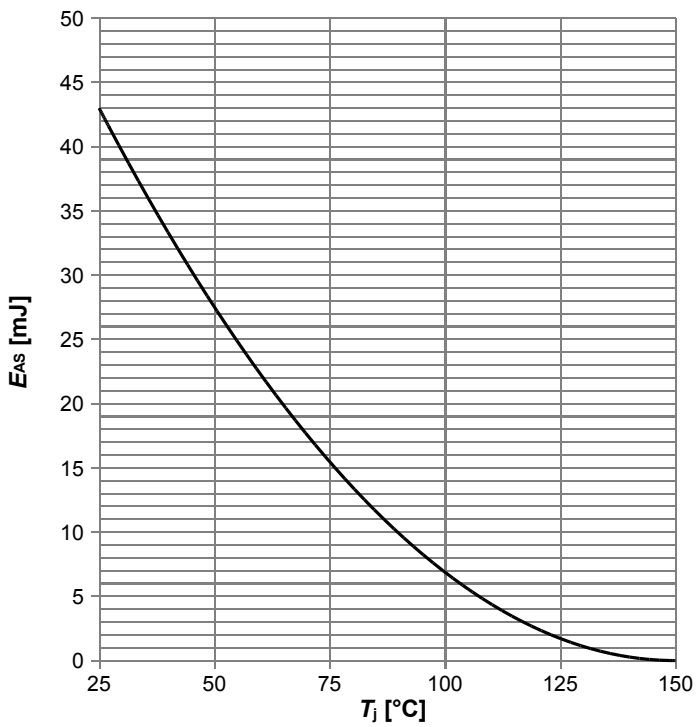

$E_{AS}=f(T_j)$; I_D=2.2 A; V_{DD}=50 V

Diagram 13: Drain-source breakdown voltage

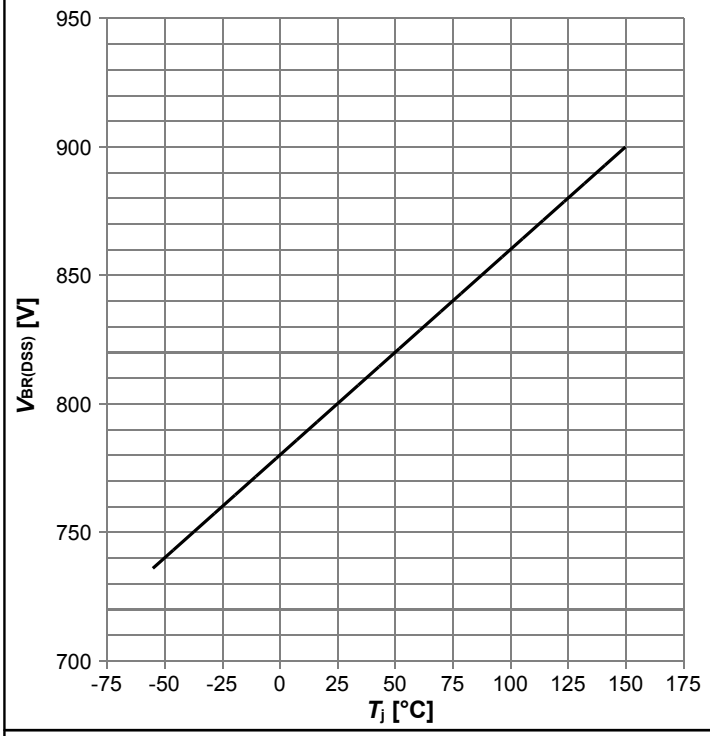

$V_{BR(DSS)}$=f(T_j); I_D=1 mA

Diagram 14: Typ. capacitances

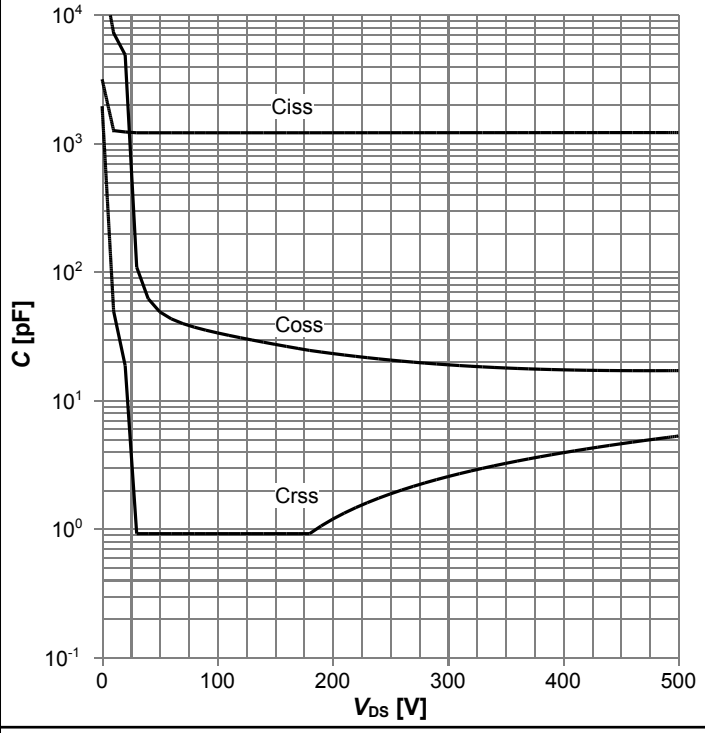

C=f(V_{DS}); V_{GS}=0 V; f=250 kHz

Diagram 15: Typ. Coss stored energy

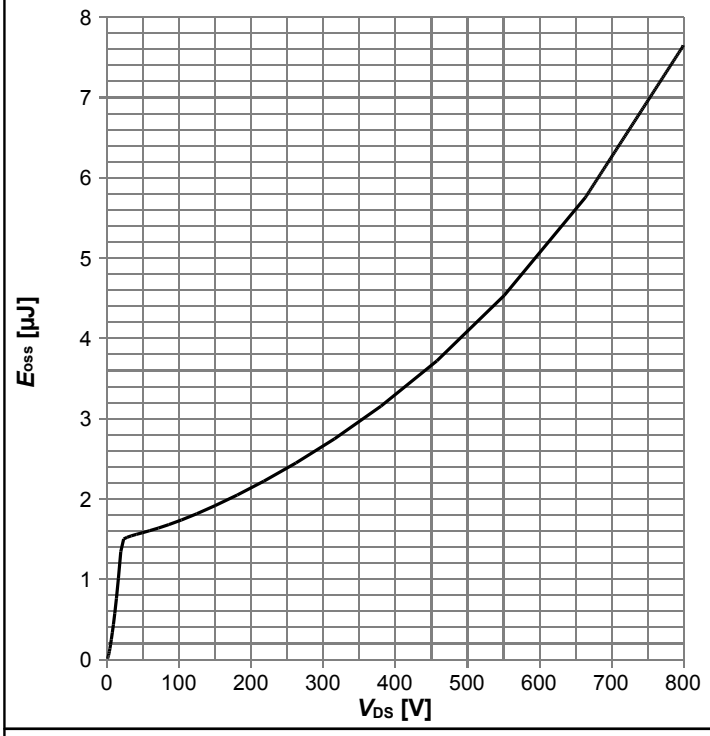

E_{oss}=f(V_{DS})

5 Test Circuits

Table 8 Diode characteristics

Test circuit for diode characteristics	Diode recovery waveform
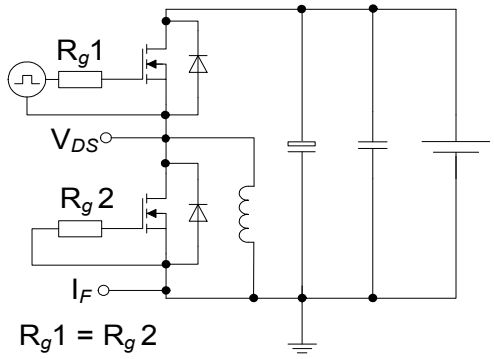	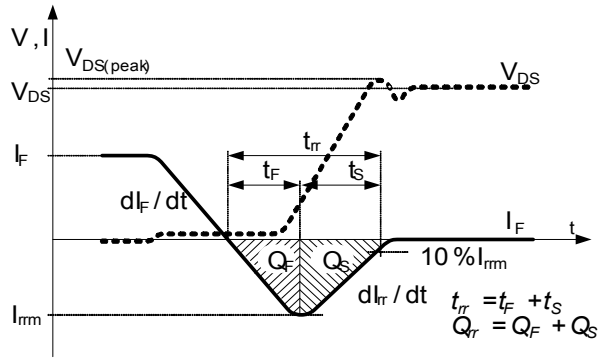

Table 9 Switching times

Switching times test circuit for inductive load	Switching times waveform
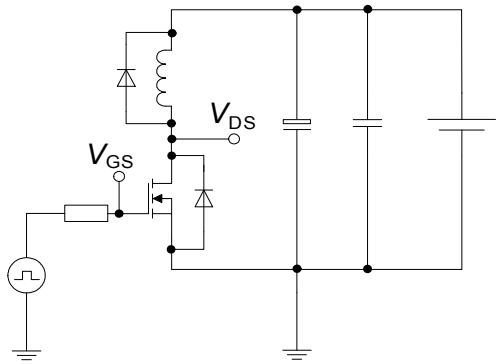	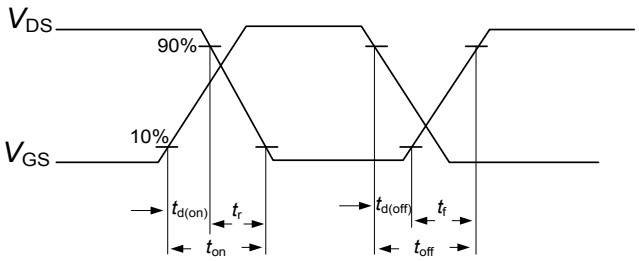

Table 10 Unclamped inductive load

Unclamped inductive load test circuit	Unclamped inductive waveform
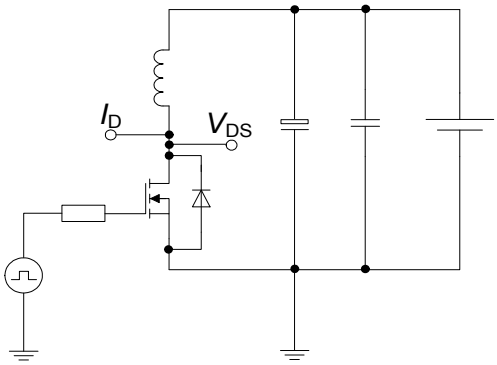	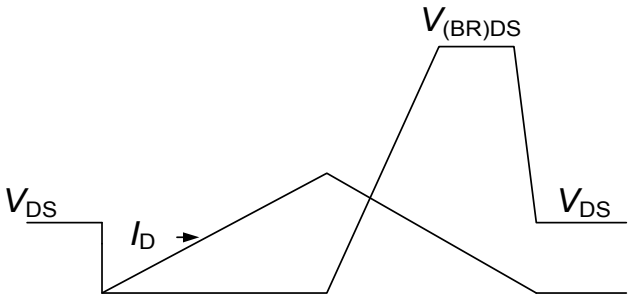

6 Package Outlines

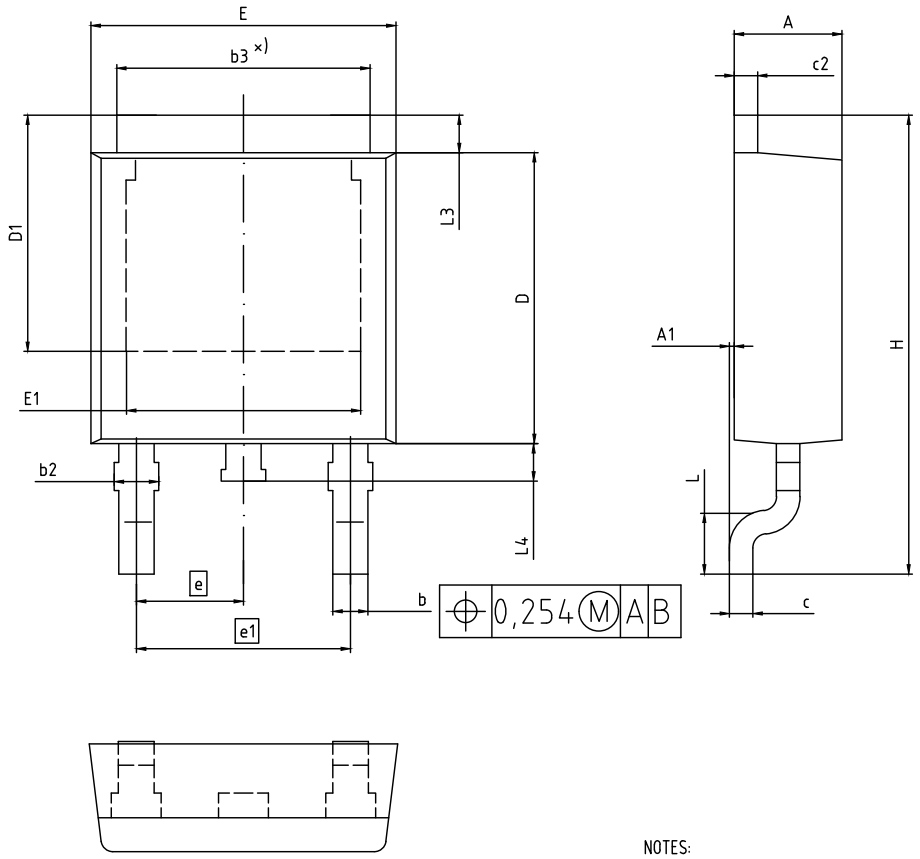

NOTES:

1. INDUSTRIAL QUALITY GRADE
2. ALL DIMENSIONS REFER TO JEDEC STANDARD TO-252 DO NOT INCLUDE MOLD FLASH OR PROTRUSIONS.

DIM	MILLIMETERS		INCHES	
	MIN	MAX	MIN	MAX
A	2.16	2.41	0.085	0.095
A1	0.00	0.15	0.000	0.006
b	0.64	0.89	0.025	0.035
b2	0.65	1.15	0.026	0.045
b3	4,95	5.50	0.195	0.217
c	0.46	0.61	0.018	0.024
c2	0.40	0.98	0.016	0.039
D	5.97	6.22	0.235	0.245
D1	5.02	5.84	0.198	0.230
E	6.35	6.73	0.250	0.265
E1	4.32	5.21	0.185	0.205
e	2.29 (BSC)		0.090 (BSC)	
e1	4.57 (BSC)		0.180 (BSC)	
N	3		3	
H	9.40	10.48	0.370	0.413
L	1.18	1.78	0.046	0.070
L3	0.89	1.27	0.035	0.050
L4	0.51	1.02	0.020	0.040

DOCUMENT NO.
Z8B00003328

SCALE 0 2.5 0 2.5 5mm

EUROPEAN PROJECTION

ISSUE DATE
05-02-2016

REVISION
06

Figure 1 Outline PG-TO 252, dimensions in mm/inches

7 Appendix A

Table 11 Related Links

- **IFX CoolMOS Webpage:** www.infineon.com
- **IFX Design tools:** www.infineon.com

Revision History

IPD80R280P7

Revision: 2016-07-05, Rev. 2.0

Previous Revision		
Revision	Date	Subjects (major changes since last revision)
2.0	2016-07-05	Release of final version

Trademarks of Infineon Technologies AG

AURIX™, C166™, CanPAK™, CIPOS™, CoolGaN™, CoolMOS™, CoolSET™, CoolSiC™, CORECONTROL™, CROSSAVE™, DAVE™, DI-POL™, DrBlade™, EasyPIM™, EconoBRIDGE™, EconoDUAL™, EconoPACK™, EconoPIM™, EiceDRIVER™, eupec™, FCOS™, HITFET™, HybridPACK™, Infineon™, ISOFACE™, IsoPACK™, i-Wafer™, MIPAQ™, ModSTACK™, my-d™, NovalithIC™, OmniTune™, OPTIGA™, OptiMOS™, ORIGA™, POWERCODE™, PRIMARION™, PrimePACK™, PrimeSTACK™, PROFET™, PRO-SIL™, RASIC™, REAL3™, ReverSave™, SatRIC™, SIEGET™, SIPMOS™, SmartLEWIS™, SOLID FLASH™, SPOC™, TEMPFET™, thinQ!™, TRENCHSTOP™, TriCore™.

Trademarks updated August 2015

Other Trademarks

All referenced product or service names and trademarks are the property of their respective owners.

We Listen to Your Comments
Any information within this document that you feel is wrong, unclear or missing at all? Your feedback will help us to continuously improve the quality of this document. Please send your proposal (including a reference to this document) to:
erratum@infineon.com

Published by
Infineon Technologies AG
81726 München, Germany
© 2016 Infineon Technologies AG
All Rights Reserved.

Legal Disclaimer
The information given in this document shall in no event be regarded as a guarantee of conditions or characteristics. With respect to any examples or hints given herein, any typical values stated herein and/or any information regarding the application of the device, Infineon Technologies hereby disclaims any and all warranties and liabilities of any kind, including without limitation, warranties of non-infringement of intellectual property rights of any third party.

Information
For further information on technology, delivery terms and conditions and prices please contact your nearest Infineon Technologies Office (**www.infineon.com**).

Warnings
Due to technical requirements, components may contain dangerous substances. For information on the types in question, please contact the nearest Infineon Technologies Office.
The Infineon Technologies component described in this Data Sheet may be used in life-support devices or systems and/or automotive, aviation and aerospace applications or systems only with the express written approval of Infineon Technologies, if a failure of such components can reasonably be expected to cause the failure of that life-support, automotive, aviation and aerospace device or system or to affect the safety or effectiveness of that device or system. Life support devices or systems are intended to be implanted in the human body or to support and/or maintain and sustain and/or protect human life. If they fail, it is reasonable to assume that the health of the user or other persons may be endangered.